LED Linear Channel Luminaires with Quick Clip Installation

Instruction Manual

Read these instructions carefully before installation and keep for future reference. Make electrical and grounded connections in accordance with the national electrical code and any applicable code. Always turn off the power supply before installation. This product must be installed in accordance with the applicable installation code by a qualified electrician who is familiar with the construction and operation of the product and the hazards involved.

Part No.	Model Number	Wattage	Input Voltage	Lumens	CCT	Dimming	Dimensions (l x w x h)	Warranty
70296	LN-4FT-W32-C40-QI	32W	100-277V	4160	4000K	0-10V	48″ x 3.14″ x 3.43″	5 year
70297	LN-4FT-W32-C50-QI				5000K			
70298	LN-8FT-W64-C40-QI	64W		8230	4000K		96″ x 3.14″ x 3.43″	
70299	LN-8FT-W64-C50-QI				5000K			

WARNING – RISK OF SERIOUS INJURY AND PROPERTY DAMAGE

Carefully read all instructions and product labels prior to installation.

To reduce risk of death, personal injury, electric shock, cuts/abrasions, falling parts or property damage from re, carefully read all warnings, instructions and product labels.

Wear gloves and safety glasses at all times when removing light fixture from carton, installing, servicing or performing maintenance.

Ensure that your installation matches all elements shown in the descriptions and drawings of the installation instructions before you begin.

Save these instructions for future reference.

- **PRIOR TO INSTALLATION, MAINTENANCE, INSPECTION OR REMOVAL, TURN OFF ELECTRICAL POWER AT FUSE OR CIRCUIT BREAKER BOX.**
- **CAUTION: RISK OF FIRE OR ELECTRIC SHOCK.** DO NOT use input power other than the voltage specified in the product specifications.
- The installation, service and maintenance of this light fixture must be performed by a licensed electrician. If you are not qualified, contact a licensed electrician.
- Product installation must comply with the National Electrical Code and all local electrical and building codes and regulations.
- Suitable for non-insulated surface and frame. DO NOT cover fixture with insulation liner or similar material.
- All wiring connections should be capped with UL approved wire connectors.
- DO NOT install fixture on unstable, loose or easily breakable surface.
- DO NOT exert force on the surface of the fixture.
- DO NOT use outdoors.
- DO NOT install if product is damaged.
- DO NOT use this equipment other than for its intended use.
- DO NOT allow the wiring to contact sharp edges, such as sheet metal edges.
- Suitable for use in damp locations.
- Suitable for use in -30 to 50 °C ambient temperatures.
- May not be compatible with all dimmers. For up-to-date compatibility, visit www.verbatimlighting.com/dimmer_support
- Keep combustible and other materials that can burn away from light fixture and lamp/lens.
- Avoid looking directly into light while on.

LED Linear Channel Luminaires with Quick Clip Installation

This device complies with Part 15 of the FCC rules. Operation is subject to the following two conditions: 1) this device may not cause harmful interference, and 2) this device must accept any interference received, including interference that may cause undesired operation.

Surface Mounted Installation

1. Using supplied screws, install the brackets parallel to each other, approximately 25 1/4'" apart center to center.

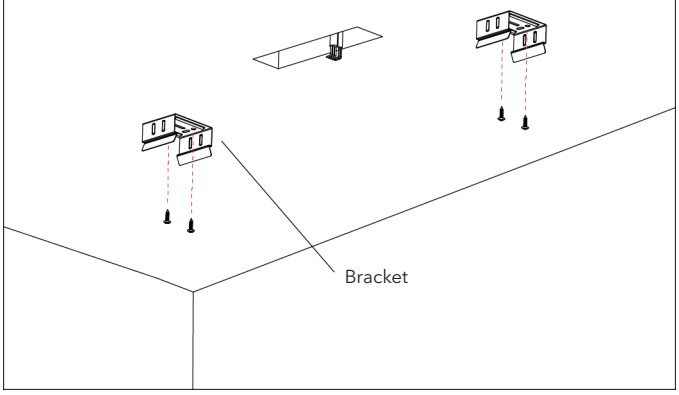

2. Turn off power at the source, and make connections using supplied wire nuts (see wiring instruction below).

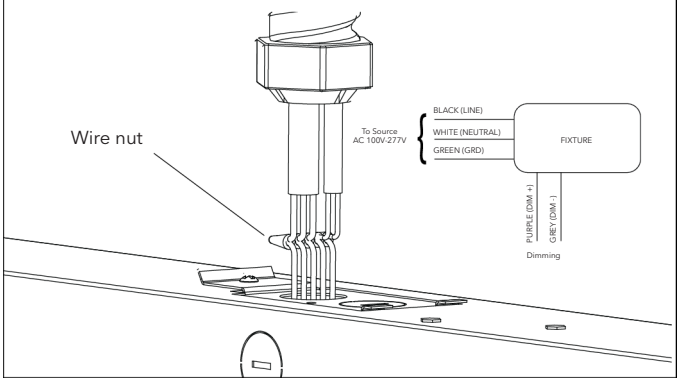

3. Secure the LED fixture into the brackets.

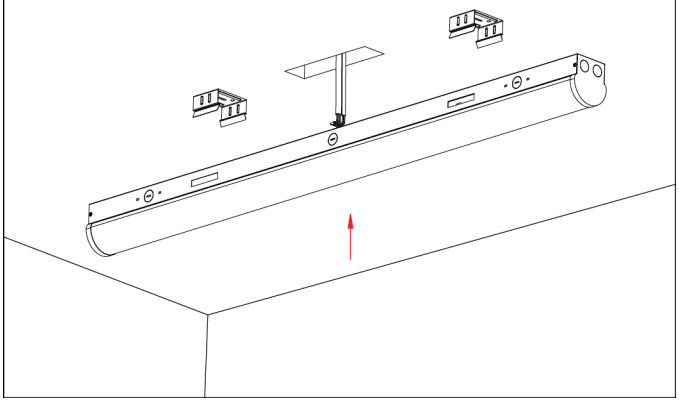

4. Once installation is complete, restore power.

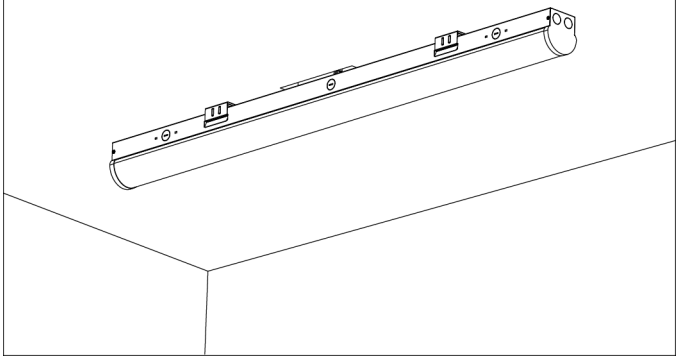

Suspended Installation (sold separately, PN #70300)

1. Snap brackets into the LED fixture.

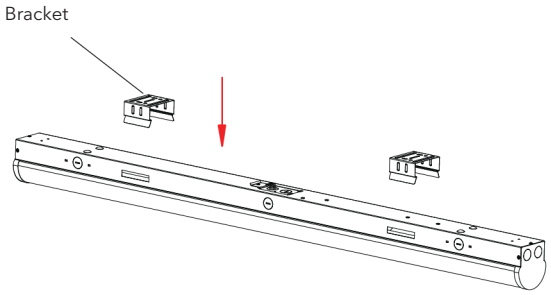

2. Attach the hook to the slotted holes of the brackets.

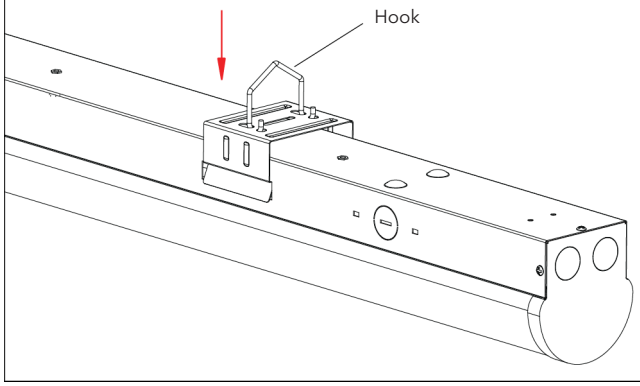

3. Using the pendant cord, suspend the lamp at the desired height.

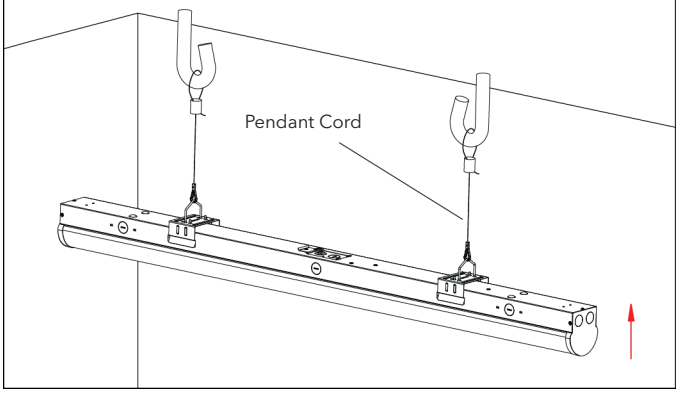

4. Turn off power at the source, and make connections using supplied wire nuts (see wiring instruction below).

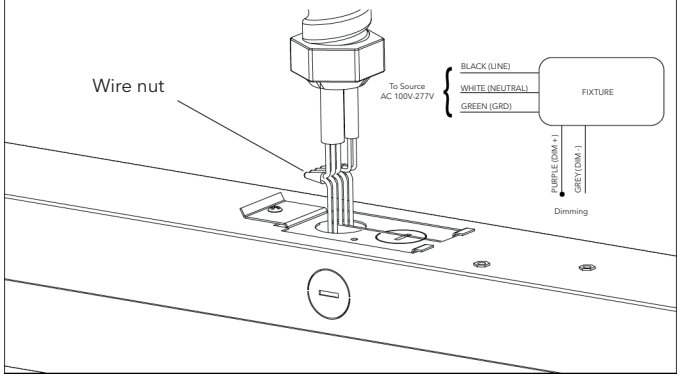

5. Insert the wires into the fixture and secure the back plate.

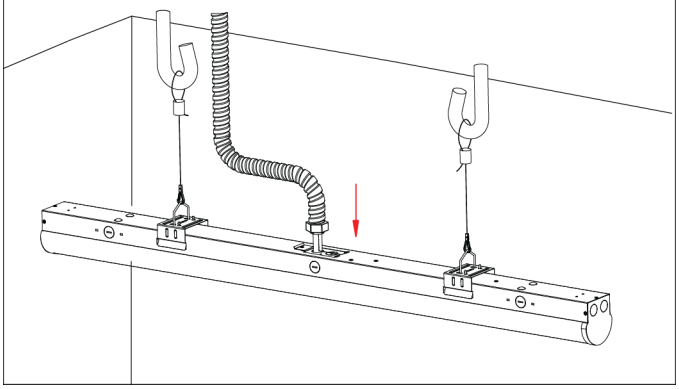

6. Once installation is complete, restore power.

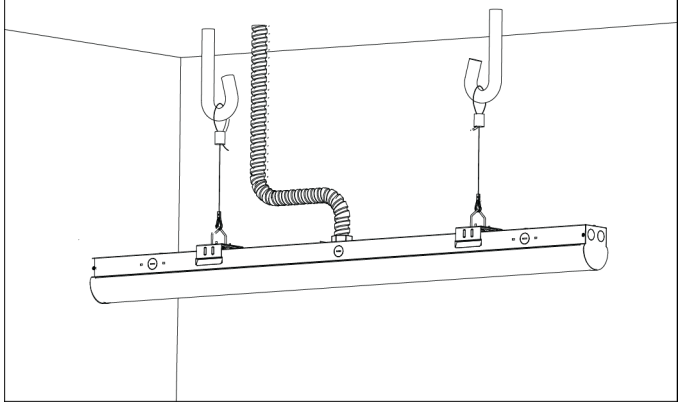

The installation must be carried out by a qualified electrician.