CRQ High Bay Installation Guide

Thank you for purchasing our CRQ High Bay. Carefully read all instructions and labels prior to installation.

- **PRIOR TO INSTALLATION, MAINTENANCE OR INSPECTION, TURN OFF ELECTRICAL POWER AT FUSE OR CIRCUIT BREAKER BOX.**

- **CAUTION:** TO REDUCE RISK OF DEATH, PERSONAL INJURY, ELECTRICAL SHOCK, CUTS/ ABRASIONS, FALLING PARTS OR PROPERTY DAMAGE FROM FIRE, CAREFULLY READ ALL WARNINGS, INSTRUCTIONS AND PRODUCT LABELS.

- DO NOT install if product is damaged.

- The installation, service and maintenance of this light fixture must be performed by a licensed electrician. If you are not qualified, contact a licensed electrician.

- Product installation must comply with the National Electrical Code and all local electrical and building codes and regulations.

- Ensure mounting surface and customer supplied components are capable of supporting the weight of the luminaire.

Operational Notes

- Input Voltage Range: 100-277VAC, 50/60Hz. If input voltage exceeds this range, it may cause failure. Please be sure to operate within given input voltage range.
- Ensure ambient operating temperature is between -40ºF and 122ºF. Using this CRQ High Bay in temperatures outside given range will reduce the CRQ High Bay lifespan.
- IP Rating: IP65, rated for use in wet locations.
- Please keep CRQ High Bay away from any corrosive substances. When cleaning, please use damp or dry cloth.

Installation Guide

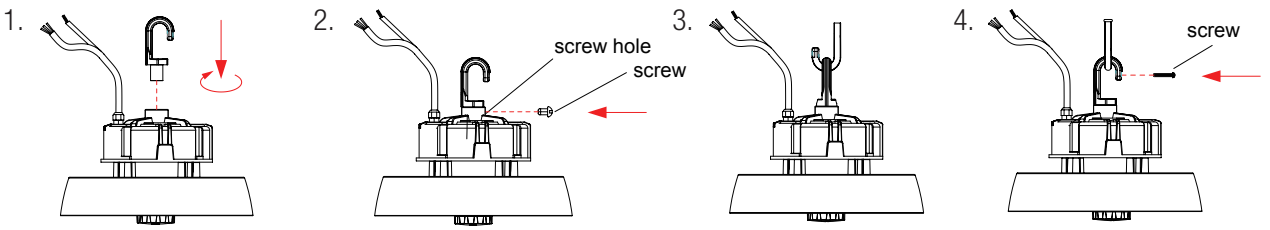

1. Screw in j-hook.
2. Tighten the set screw.
3. Hang the fixture onto the existing mount for retrofit or install eye hook if necessary.
4. Lock j-hook into place with locking screw.

Product Dimension

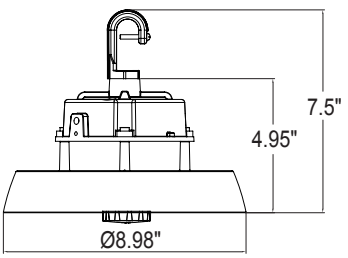

100W

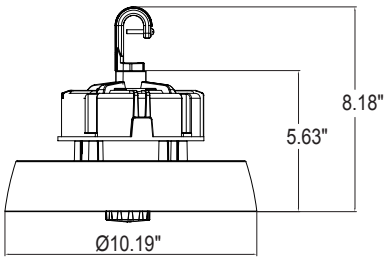

150W

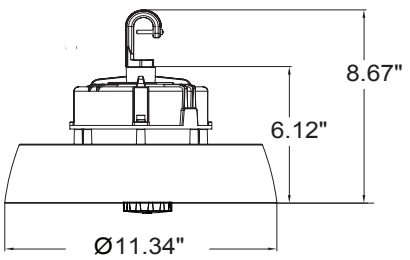

200W

CRQ High Bay Installation Guide

Product Specifications

Part Number	Model Number	Input Voltage (VAC)	Input Wattage (W)	Input Current (mA)	Input Frequency (Hz)	Lumens (lm)	CCT (K)	Dimensions LxWxH (in)	Weight (lbs)
70609	CRQ-100W-C50 [-MS; blank]	100-277V	100	1100-397	50/60	15,000	5000	9.0 x 5.0	4.4
70605	CRQ-150W-C50 [-MS; blank]		150	1650-596		22,500		10.2 x 5.6	5.7
70610	CRQ-200W-C50 [-MS; blank]		200	2200-794		30,000		11.3 x 6.1	7.9

Wiring Connection

Turn off the power, connect AC wire, black wire to L, white wire to N, and green wire to ground.

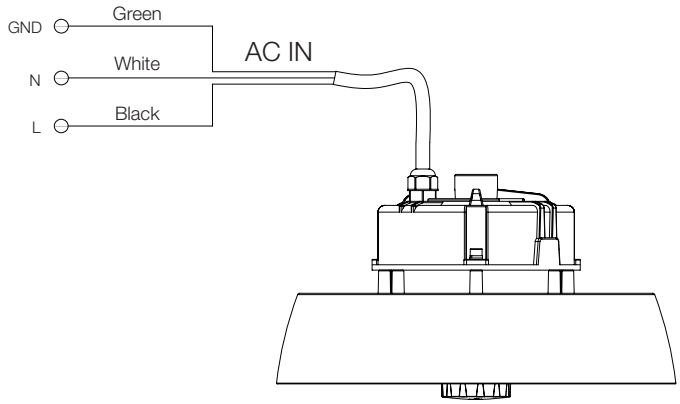

CRQ High Bay

Installation Instructions for Motion Sensor Module (sold separately, #70681)

1. Remove the motion sensor cover by turning it counterclockwise and twisting it out.
   a. Motion sensor cover
2. Insert the motion sensor module (#70681) by turning it clockwise and tightening.
   a. Motion sensor module
3. The installation is complete.

1.

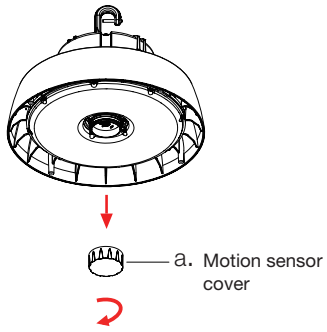

2.

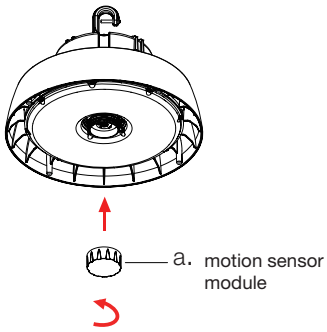

3.

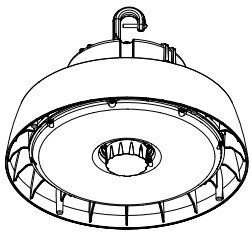

Wiring Connections Inside Housing (reference only):

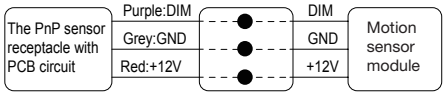

Warranty & Support

Verbatim 5-year warranty www.verbatimlighting.com/warranty.
For support, visit www.verbatimlighting.com/support