LED Downlights Installation Instructions

Important Safety Instruction

To reduce risk of death, personal injury, electric shock, cuts/abrasions, falling parts, or property damage from fire, carefully read all warnings, instructions and product labels.

- WARNING - Risk of fire or electric shock. LED fixture installation requires knowledge of luminaires electrical systems. If not qualified, do not attempt installation. Contact a qualified electrician.
- WARNING - Risk of fire or electric shock. Install this fixture only in ceilings that have the construction features and dimensions shown in the photographs and/or drawings and where the input rating of the retrofit kit does not exceed the input rating of the luminaire.
- WARNING - To prevent wiring damage or abrasion, do not expose wiring to edges of sheet metal or other sharp objects.
- Prior to installation, maintenance, inspection or removal, turn off electrical power at fuse or circuit breaker box.
- Do not make or alter any open holes in an enclosure of wiring or electrical components during kit installation.
- Product installation must comply with the National Electrical Code and all local electrical and building codes and regulations.
- Suitable for wet locations.
- Ensure that the light fixture operates within an ambient temperature of -20 to +45ºC (-4 to +113ºF).

Product Specifications

Part Number	Size	Model #	Input Voltage (V)	Lumens (lm)	Input Wattage (W)	Input Current (mA)	Input Frequency (Hz)
70621	4 in.	D4-L650-5CCT-JB	120	650	9	115	60
70622	6 in.	D6-L900-5CCT-JB		900	12	127	

Part Number	Cut Hole Size (ΦA)	Diameter (fixture only) (ΦB)	Height (fixture only) (C)	Product Weight (fixture only)
70621	110mm / 4.3 in.	120mm / 4.7 in.	20mm / 0.8 in.	375g / 0.8 lbs
70622	160mm / 6.3 in.	170mm / 6.7 in.		494g / 1.1 lbs

70621

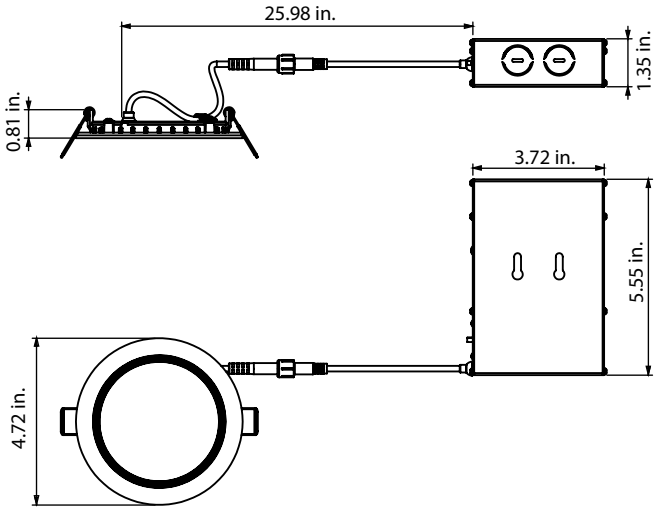

70622

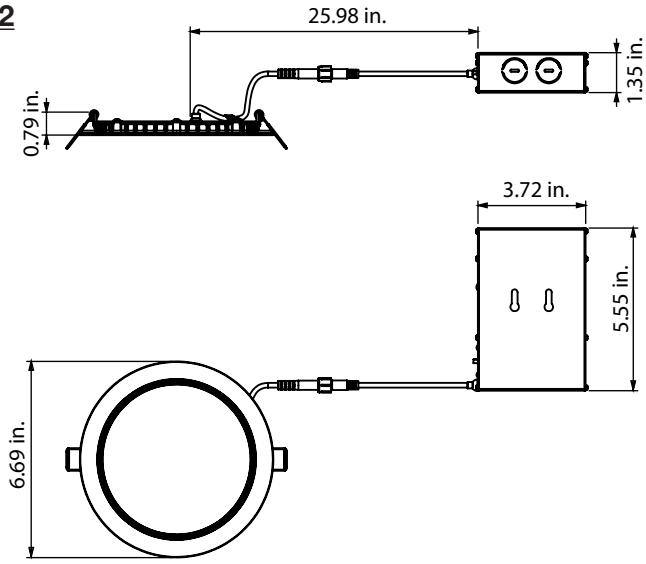

LED Downlights Installation Instructions

Installation Steps

1. Turn off electrical power at fuse or circuit breaker box.
2. Using the provided cardboard template, trace a circle on the ceiling. Cut a ceiling hole inside the traced circle or according to the dimensions in the above product specification table.
3. Run electrical wire (use NMD90 Romex or BX cable) from the power supply through the cut-out hole.
4. Open the cover of the junction box on the back of downlight and remove the appropriate knockouts.
5. Insert the electrical supply cable through the knockout and secure with a cable connector (sold separately).
6. Using provided connectors, connect the green (ground) wire from the power source to the green (ground) wire of the j-box. Connect the white wire from the power source to the white wire of the j-box. Connect the black wire from the power box to the black wire of the j-box (Fig. 1).
7. Select desired color temperature (Fig. 2).
8. Place all wiring and connections back in the j-box and close the cover (Fig. 3).
9. Insert junction box through the cut-out hole (Fig. 4). NOTE: For new construction, the junction box needs to be firmly secured to studs, joists or other fixed structural units.
10. Connect the fixture to the junction box by inserting and twisting the male/female connectors (Fig. 4).
11. Push up the spring clips and insert the downlight into the ceiling. Release the springs and make sure that the downlight is secure and sitting flush in the ceiling (Fig. 5).
12. Turn on power.

Fig. 1

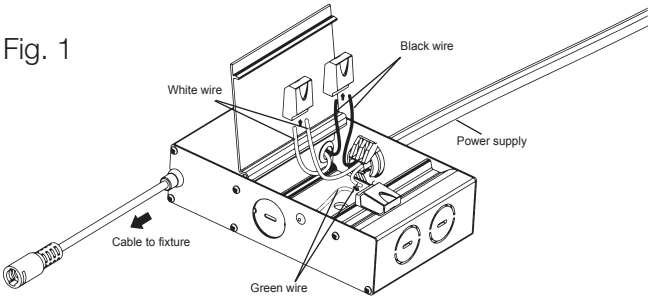

Fig. 2

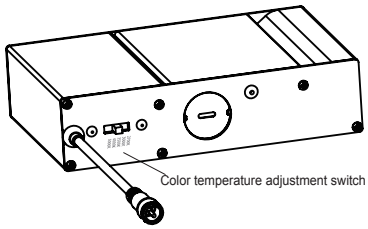

Fig. 3

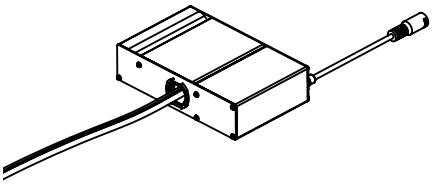

Fig. 4

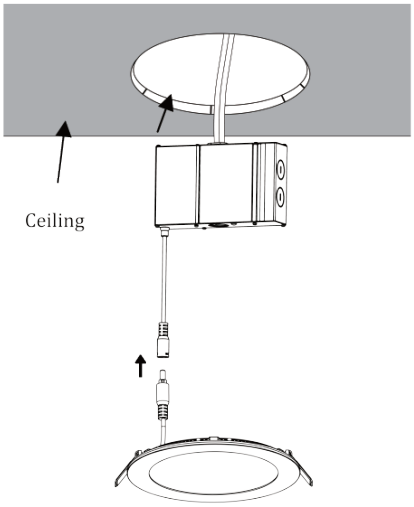

Fig. 5

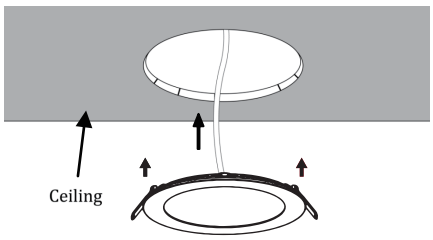

Warranty

Verbatim 5-year warranty www.verbatimlighting.com/warranty
For support, visit www.verbatimlighting.com/support
May not be compatible with all dimmers.
For up-to-date compatibility please visit www.verbatimlighting.com/dimmer_support.