TranquiLED Installation Instructions

Important Safety Instruction

WARNING – RISK OF SERIOUS INJURY AND PROPERTY DAMAGE: Carefully read all instructions and product labels prior to installation.

- WARNING- Risk of fire or electric shock. The installation, service, and maintenance of this light fixture must be performed by a licensed electrician. If you are not qualified, contact a licensed electrician.
- Product installation must comply with the National Electrical Code and all local electrical and building codes and regulations.
- Do NOT install if product is damaged.
- Prior to installation, maintenance, inspection or removal, turn off electrical power at fuse or circuit breaker box.
- Do NOT use input power other than the voltage specified on the Product Specifications.
- All wiring connections should be capped with UL approved wire connectors.
- Ensure that your installation matches all elements shown in the descriptions and drawings of the installation instructions before you begin.
- Do NOT make or alter any openings in the housing, enclosure of wiring or electrical components of the light fixture during installation.
- Do NOT allow the wiring to contact sharp edges, such as sheet metal edges.
- Wear gloves and safety glasses at all times when removing light fixture from carton, installing, servicing, or performing maintenance.
- Avoid looking directly into light while on.
- Keep combustible and other materials that can burn away from light fixture and lamp/lens.
- Suitable for use in damp locations.
- Ensure that the light fixture operates within an ambient temperature of -4°F to 104°F (-20°C to +40°C).

Verbatim 5-year warranty www.verbatimlighting.com/warranty
For support, visit www.verbatimlighting.com/support

This device complies with Part 15 of the FCC rules. Operation is subject to the following two conditions:
1. this device may not cause harmful interference, and
2. this device must accept any interference received, including interference that may cause undesired operation.

Product Dimensions

Size	øA	øB	H	Cut-out hole
4″	4.69 in.	5.35 in.	4.41 in.	4.92 in.
6″	5.87 in.	7.87 in.	5.04 in.	6.10 in.

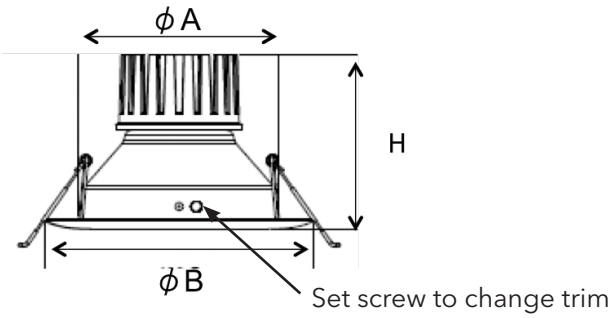

Wire Connections

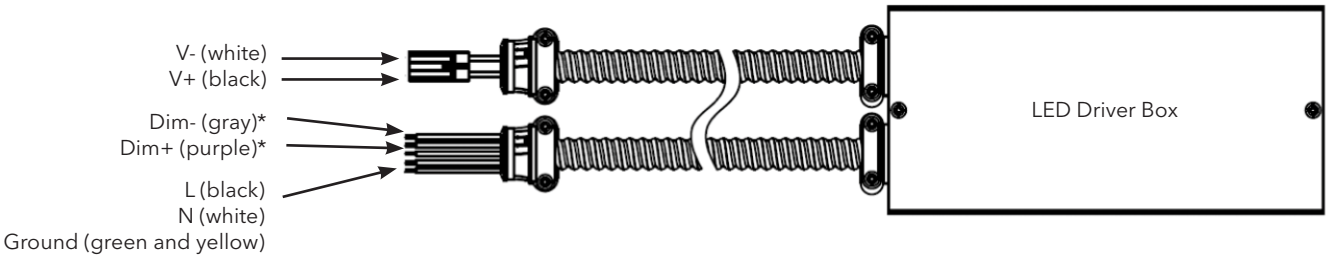

*if equipped

TranquiLED Installation Instructions

Wiring Diagram

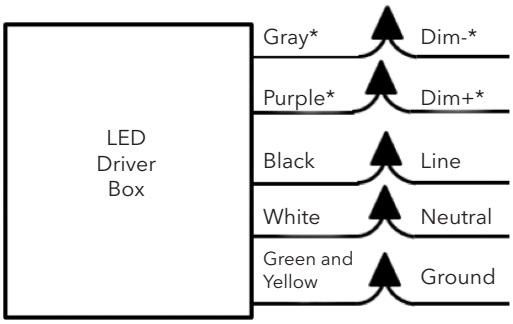

*if equipped

WARNING

TYPE IC
INHERENTLY PROTECTED
ACCESS ABOVE CEILING REQUESTED
BLINKING LIGHT OF THIS THERMALLY PROTECTED
LUMINAIRE MAY INDICATE OVERHEATING
MIN 90 C SUPPLY CONDUCTORS
CONSULT A QUALIFIED ELECTRICIAN TO ENSURE
CORRECT BRANCH CIRCUIT CONDUCTOR

Retrofit Installation

1. Turn off power at the source to the existing fixture.
2. Remove existing reflector, trim and lamp. You may need to adjust and/or remove the socket or bracket.
3. Measure the dimensions of the recessed housing to confirm that the space is suitable for this system.
4. Open the junction box, disconnect the wires to the current ballast and remove the ballast.
5. Remove the conduit knockout from the junction box.
6. Place the LED driver box next to the frame.
7. Take the cord with loose wires and insert it into the junction box. Connect the power and dimming wires (if equipped) according to the Wiring Diagram in this Installation Guide (p.2).
8. Attach the junction box cover.
9. Connect the quick connector to the downlight.
10. Squeeze the two housing clips into an upright position and insert lamp into the ceiling.
11. Release the housing clips and push lamp into ceiling until secure and flush.
12. Once installation is complete, restore power.

Step 2

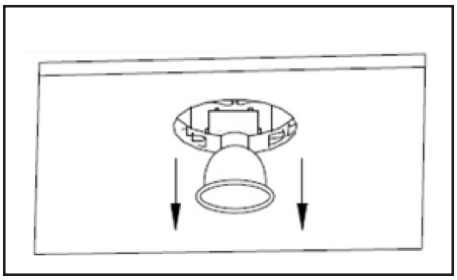

Step 4-5

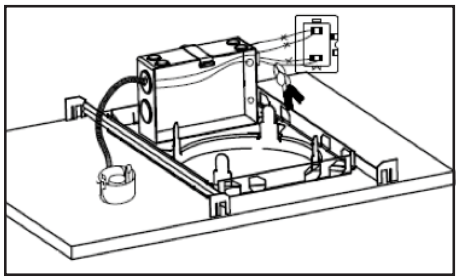

Step 6-8

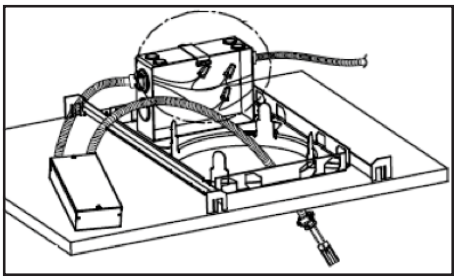

New Construction Installation

1. Make sure the power is turned off at the source to the location in which you are installing the product.
2. Cut a ceiling hole according to the dimensions provided on page 2.
3. Remove the conduit knockout from the junction box.
4. Place the LED driver box next to the frame.
5. Take the cord with loose wires and insert it into the junction box. Connect the power and dimming wires (if equipped) according to the Wiring Diagram in this Installation Guide (p.2).
6. Attach the junction box cover.
7. Connect the quick connector to the downlight.
8. Squeeze the two housing clips into an upright position and insert lamp into the ceiling.
9. Release the housing clips and push lamp into ceiling until secure and flush.
10. Once installation is complete, restore power.